Combination Locks - 2086, 2286, 2486, 3486, 3686, 3786
Operation & Change Instructions

Combination Factory Setting

Make sure the dial knob "0" is aligned with the proper hub number 1, 2, 3, or 4 on the lock body hub. The factory hub number is marked on the upper left corner of the label on the rear of the lock. The factory hub number position results in the combination number setting that is marked on the rear label. See illustration.

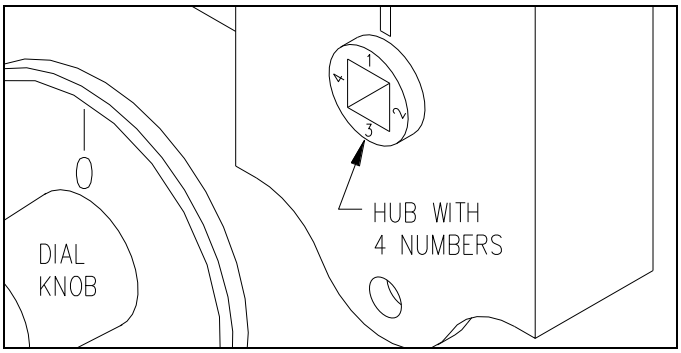

To Operate The Lock

There is an index to which the dial number is aligned on both the lock body and the front of the door to which the lock is fastened.

1. Turn dial to left (CCW - counterclockwise) at least four times and stop when first number is aligned with index.
2. Turn dial to right (CW - clockwise) passing first number and stop when second number is aligned with index.
3. Turn dial to left (CCW) and stop when third number is aligned with index.
4. Turn dial firmly to right (CW) to open lock while pulling door open.

IMPORTANT: If any combination number is turned past the index, the entire series of numbers must be redialed starting with 1 above.

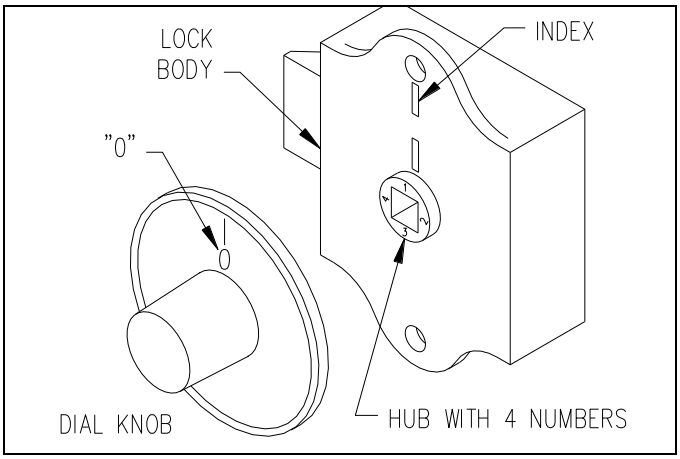

To Change Combination Number

1. From the rear of the door and lock, remove the two screws fastening lock to door. Do not remove the two smaller screws holding the cover on the rear of the lock.
2. Check that the dial knob is positioned at the proper factory-set hub number (see above) with the dial "0" aligned with the index.
3. Remove the dial knob and rotate dial to "25" on opposite side of dial and reinsert dial knob into lock shaft. This will set the dial knob at a new hub number opposite the previous setting.
4. Reinstall lock to rear of door with the two screws.
5. While looking through the peephole in the back of the lock, turn dial to the left (CCW) at least four times and stop when the slot in the first wheel (the one nearest the lock cover) comes in line with the peephole. Note that there are two slots in the first wheel. Look for the larger of the two. Read and record the first dial number at the index.
6. Turn dial slowly to the right (CW) until the second wheel slot comes in line with the first wheel slot and the peephole. Record the second dial number at the index.
7. Turn dial slowly to the left (CCW) until the fence in the peephole drops into the two slots in the first and second wheels. Record the third dial number at the index.
8. Turn the dial firmly to the right (CW) to open lock. If the lock does not operate, carefully repeat steps 1 thru 7 above.

CAUTION: Before closing door, test new setting several times.
DO NOT LUBRICATE THIS LOCK.

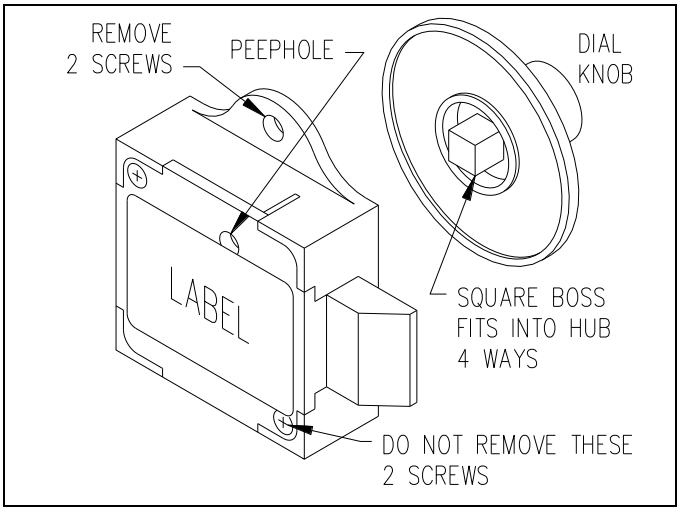

SALSBURY INDUSTRIES
18300 Central Avenue, Carson, CA 90746-4008
Phone: 1-800-624-5269 Int'l Phone: 323-846-6700
Fax: 1-800-624-5299 Int'l Fax: 323-846-6800
www.mailboxes.com engineering@mailboxes.com

Installation instructions are provided as general guidelines. It is advised that a professional installer be consulted. Salsbury Industries assumes no product assembly or installation liability.
Copyright © 2020 Salsbury Industries. All rights reserved. (Rev. 04, 1/22/2014)